User manual

IVADE

Model:IV-N800 User manual



This product is planned and manufactured with safety in mind.
Warranty applies only when used as instructed. Failure to comply with the warnings and precautions described in this document
Please note that we assume no responsibility for any accidents resulting from use.

packing list

Parts name	Picturer view		qty	Note
Running area	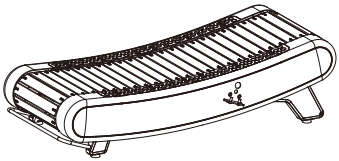	pcs	1	
The left column	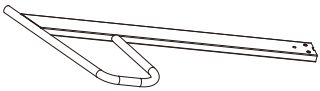	pcs	1	
The right column	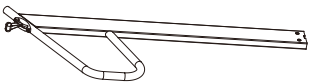	pcs	1	
Display holder	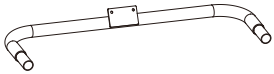	pcs	1	
Digital display	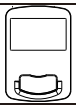	pcs	1	
User manual		pcs	1	
Hardware package		bag	1	

Hordware package

No.	Parts Name	specification	Picture	qty
1	Hexagon socket screw with flat round head	M8X25	[redacted]	4
2	Hexagon socket screw with flat round head and half tooth	M10×50	[redacted]	4
3	Hexagon wrench	5MM		1
4	Hexagon wrench	6MM	[redacted]	1
5	Flat washer	¢10	[redacted]	4
6	Spring washer	¢10	[redacted]	4
7	Flat washer	¢8	[redacted]	4
8	Spring washer	¢8	[redacted]	4
9	Hexagon socket screw with flat round head	M8x16	[redacted]	4

Products view

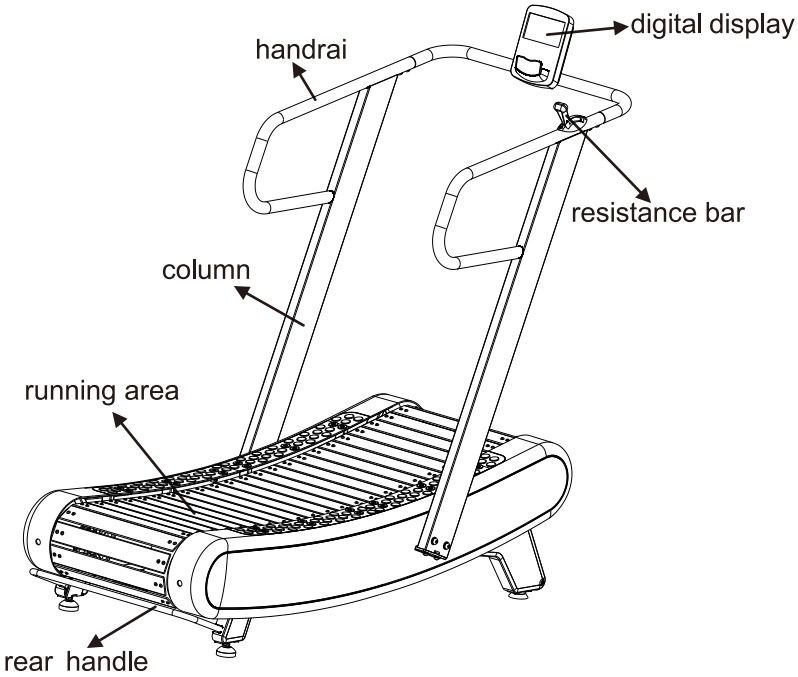

product installation

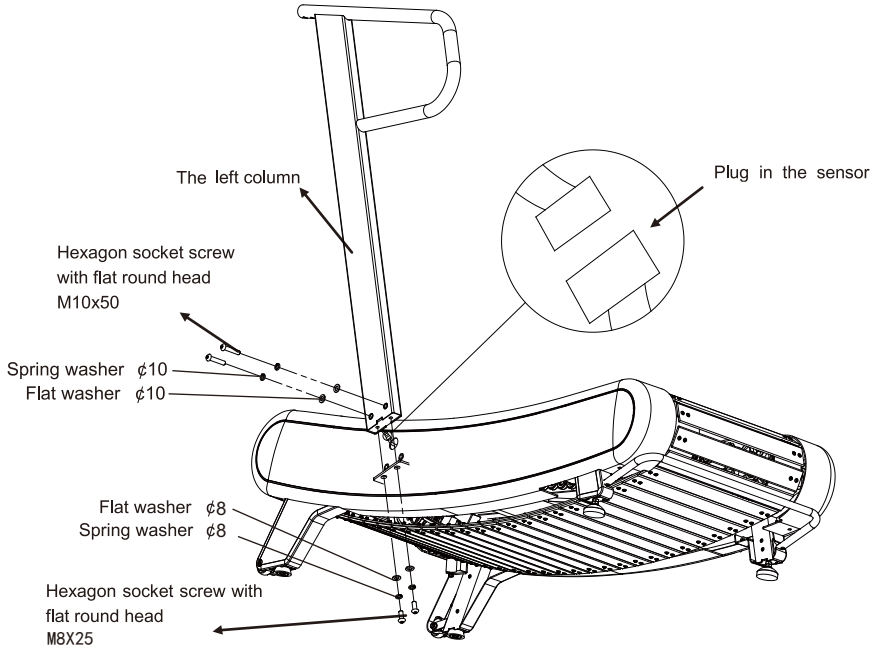

First step:

First, use two hexagon socket flat head screws M10x50 on the left column to put one ¢10 spring washer and one ¢10 flat washer into the running platform through the two holes on the side of the left column. This No need to lock, and then use 2 hexagon socket flat head screws M8x25 to put 1 ¢8 spring washer and 1 ¢8 flat washer respectively through the 2 holes of the running platform extension plate and lock to the 2 under the column. There is no need to lock the holes at this time, as shown in the figure. Note: It is necessary to insert the sensing wire plug extending from the left column and the sensing wire plug extending from the treadmill.



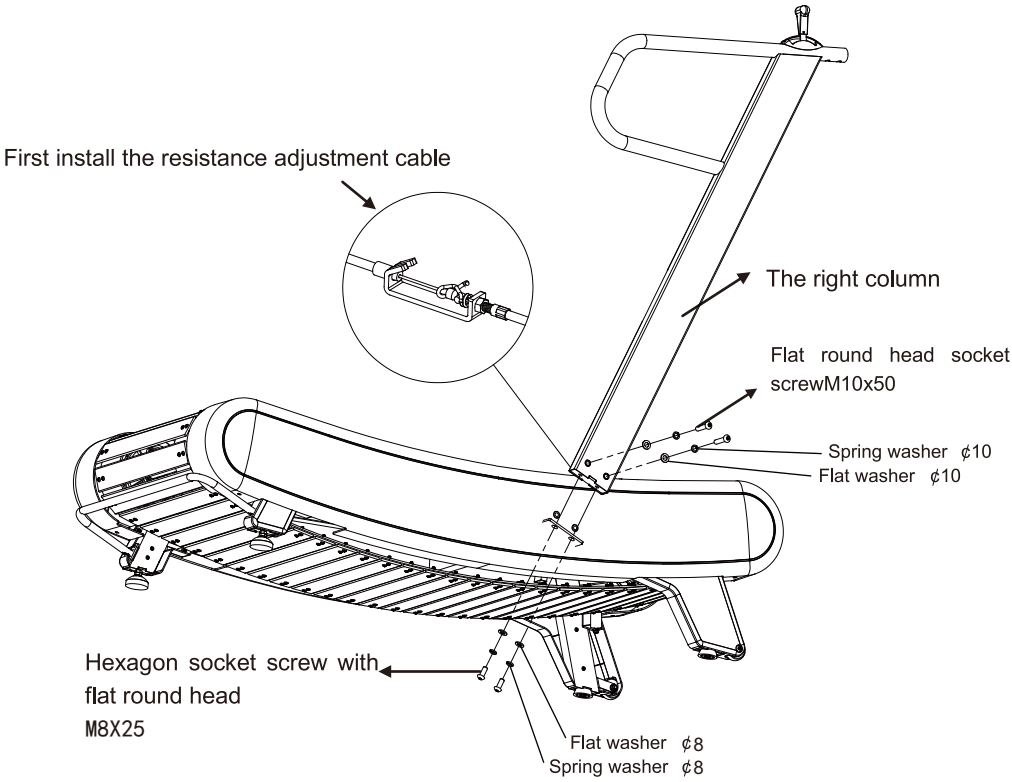

Second step:

First use 2 hexagon socket flat head screws M10x50 on the right column to put 1 ¢10 spring washer and 1 ¢10 flat washer respectively on the treadmill through the two holes on the side of the right column. This No need to lock, and then use 2 hexagon socket flat head screws M8x25 to put on 1 ¢8 spring washer and 1 ¢8 flat washer respectively through the 2 holes of the running platform extension plate and lock to the 2 under the column. There is no need to lock the holes at this time, as shown in the figure. Note: It is necessary to connect the cable head extending from the right column with the cable seat extending from the treadmill.

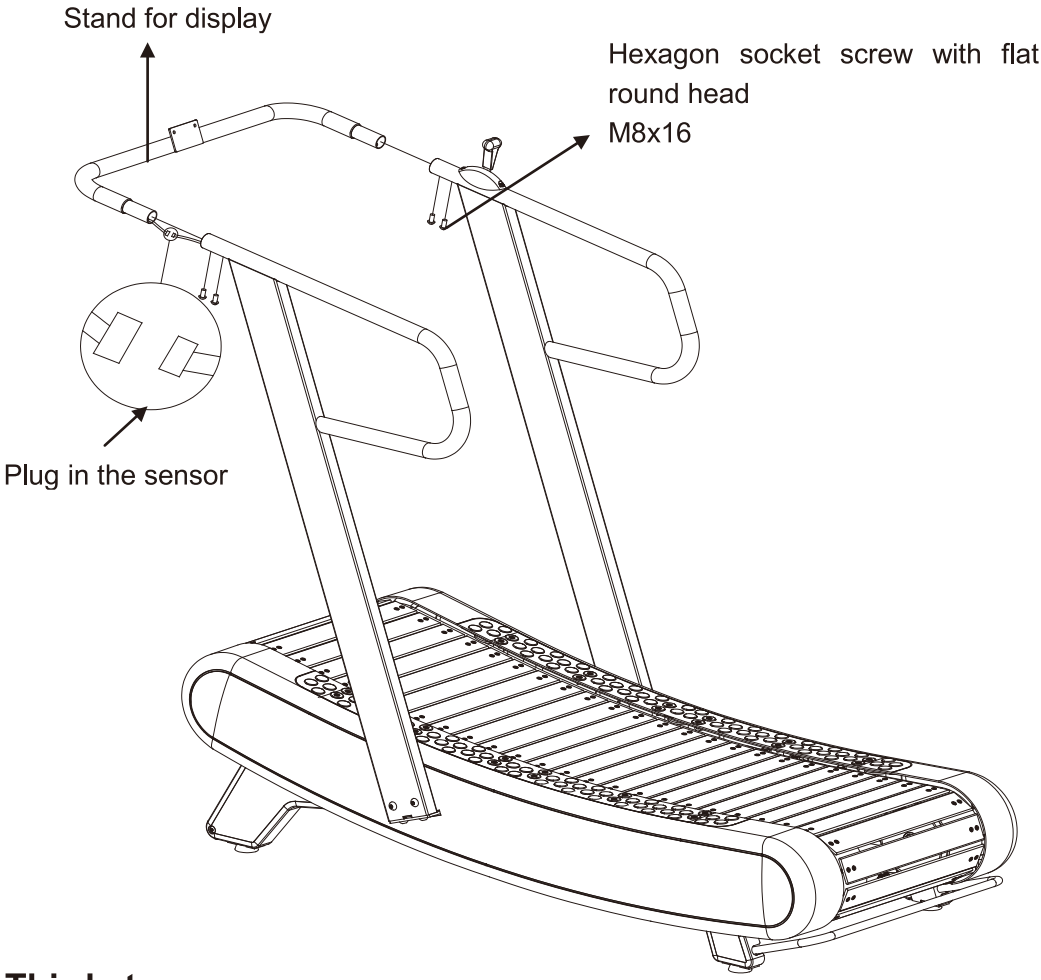

Third step:

Connecting the left and right connection frame with lift and right column, fixed with 4 pcs M8* 16 screws .(see the picture above)

Attention:

1:connectiong the sensor by left connection frame and left side column.

2:Tighten together with the screws that were not tightened in the first two steps

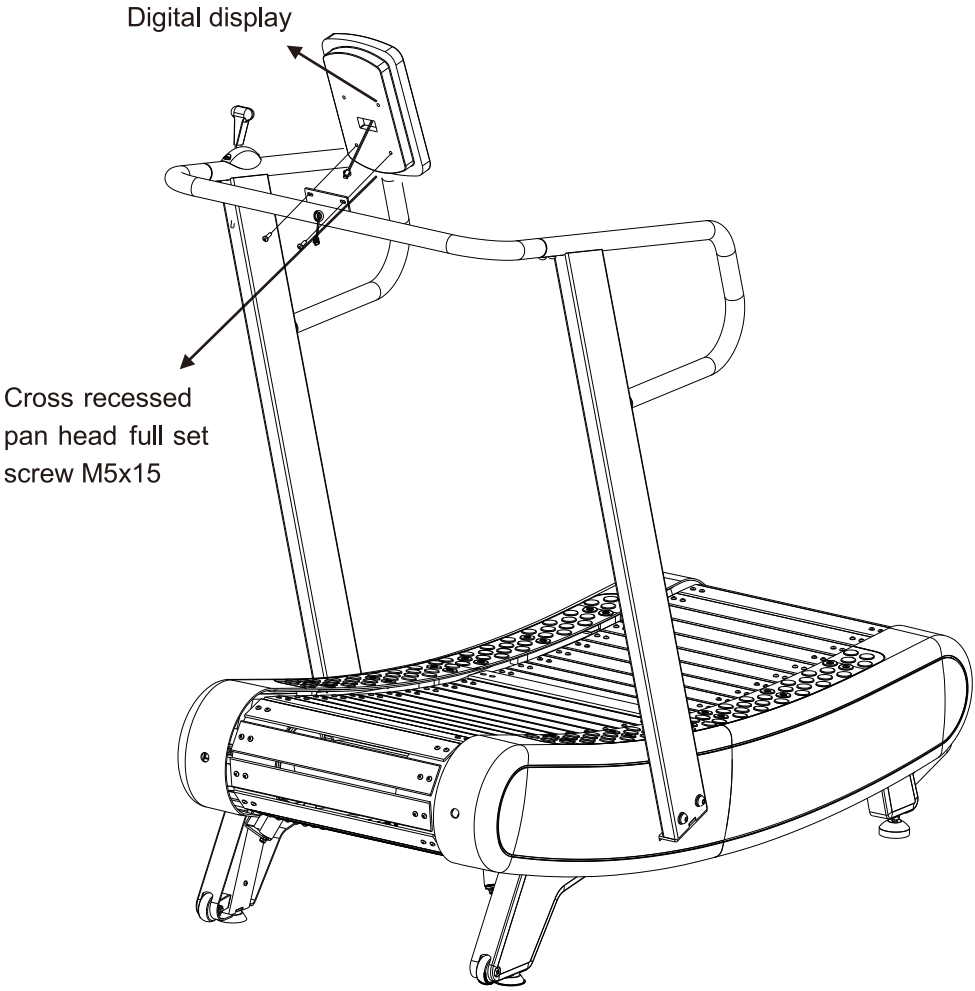

Fourth step:

Fixed the display stand on the right and lift side Handel.(connecting the sensor from left and right side connection frame,).

Fixed the screws by the above 3 steps.

Then fixed the digital display with 2 pcs M5*15 screw on the stand. then put the sensor in the speed jack. (see the picture above.).

The assembly is completely.

Attention:

Put the dry battery on the monitor



With digital watches with screws to fix electronic watch in table frame

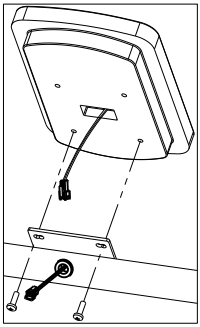

Connect the monitor plug to the jack on the back of the monitor

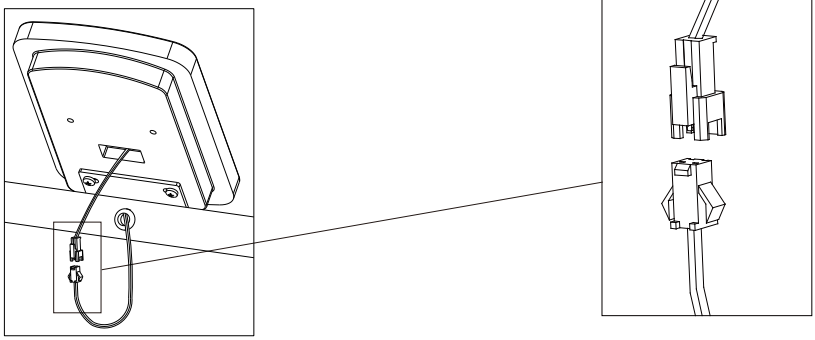

The display is fixed to the watch holder with two cross slot disk head full tooth screws M5x15, and then the induction wire plug stretched out in the watch holder is inserted into the speed Jack on the back of the electronic watch, as shown in the figure, so that the installation is completed.

Directions for use

In order not to let your legs come out of the picture,
please walk slowly. Adjust the speed slowly until you get used to it.

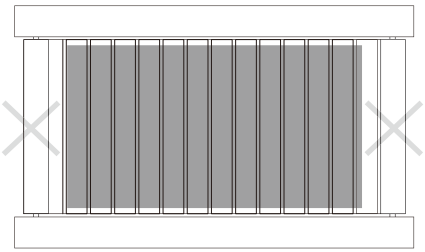



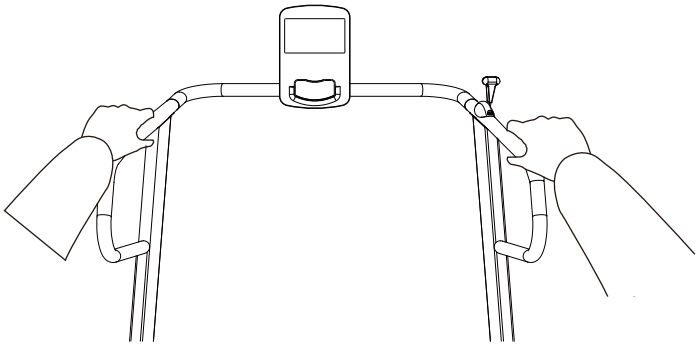

The available range of the steering wheel is shown in the figure.



When driving, pull your steering wheel backwards. This will be very dangerous. Please stop.

Please don't put your feet on the roller.



If you step on the roller and slide up, you are likely to die associated with the main body damage.

[redacted]

When indoor runners get off, please slow down and get off。

[redacted]

It may cause injury such as pinching your feet.
Do not use with bare feet, socks or slippers.
Be sure to wear running shoes when using it.

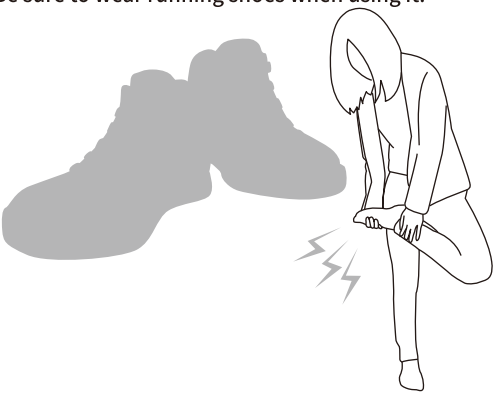

If you feel something wrong with the belt while riding, check and adjust the belt. Adjusting the running belt.

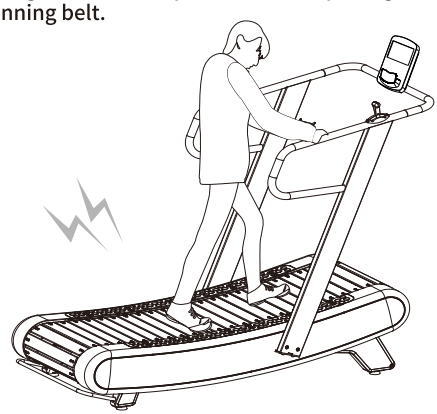

Adjust the running belt

When you use a treadmill, the pressure on the running belt is not balanced due to the different forces used by the two feet during running, which causes the running belt to deviate from the center. This deviation is normal, and you need to bring the walking belt back to the center.
Observe which side the walking belt is skewed while running.

If it is biased to the left, use a hex wrench to turn the left screw clockwise or the right screw 1/4 turn counterclockwise,

If it is biased to the right, use a hex wrench to turn the right screw clockwise or the left screw 1/4 turn counterclockwise

If the walking belt is still not in the middle, repeat the above movements until it is adjusted to the middle

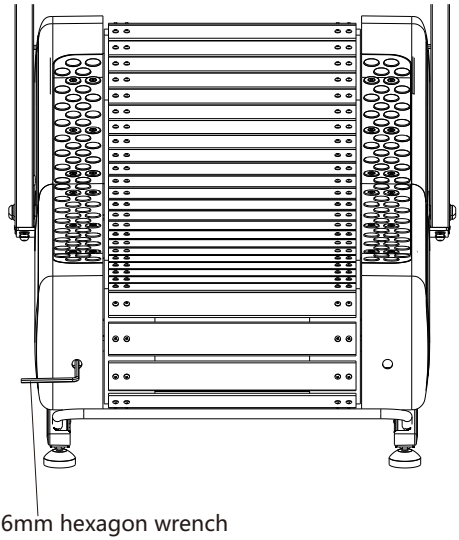

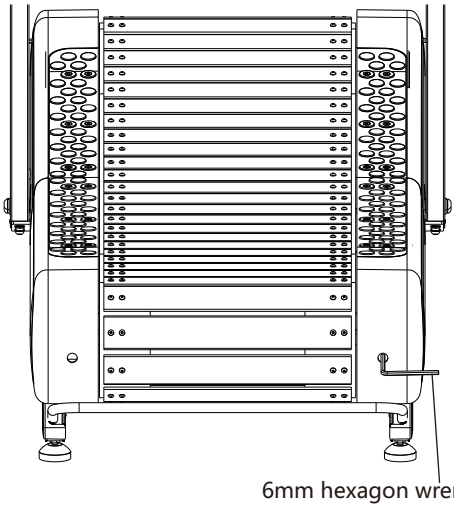

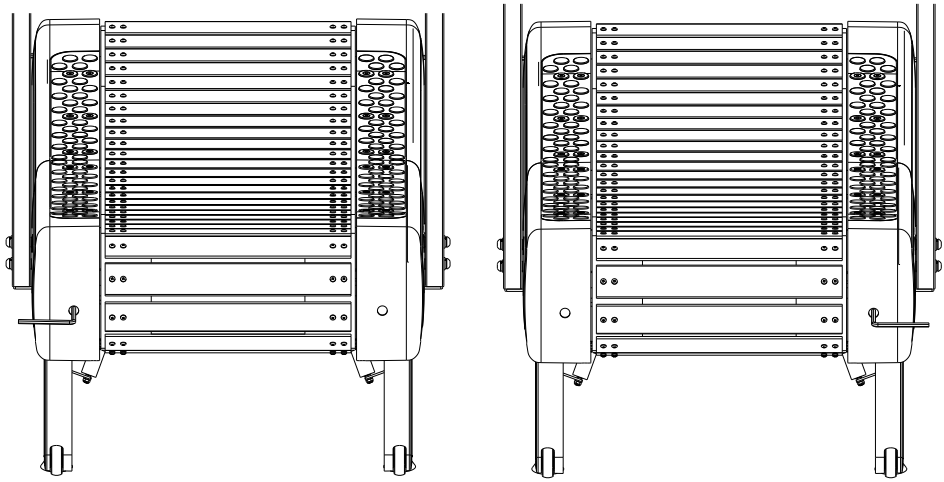

The front adjustment is the same as the back adjustment

After the adjustment, pay attention to whether the lowest point of the running belt touches the ground.
If so, adjust the both sides of the walking belt clockwise at the same time until it cannot reach the ground.

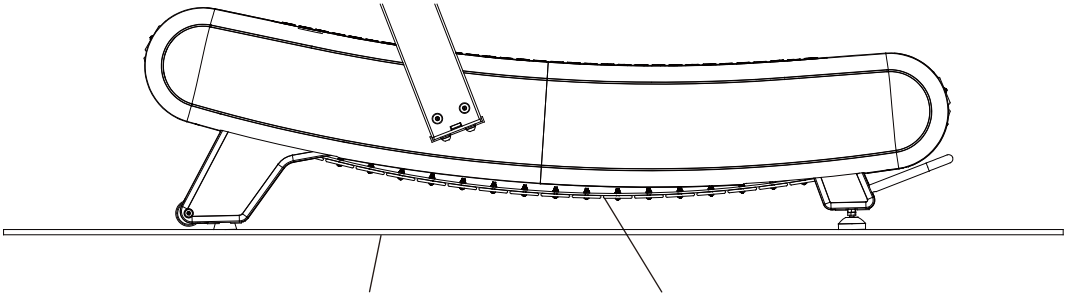

The lowest point of the walking belt must not touch the ground.

Use treadmill:
Place the treadmill on a flat ground (if the ground is uneven, the running belt will deflect)
First stand on the side strips on both sides of the treadmill, then hold your hand on the handrail, then step into the running area and start slowly, gradually increase your footsteps until you want
The speed you want; when you want to stop running, hold your hand on the handrail, then gradually slow down your footsteps to stop.

When the belt is biased to one side

If you make a sound other than the normal working sound, then your belt may rub on one side

An adjustment bolt on the side of the belt is included. Use the included hexagonal wrench, turn clockwise l ittle by little

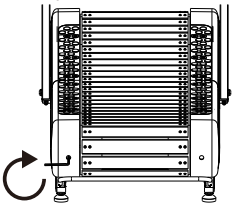

Turn the belt for about 5 minutes, do not improve

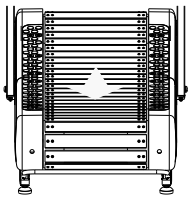

In case of abnormal noise, it may be too tight because of it, so please r elax a little

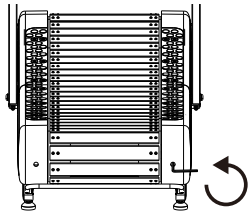

If the stitches are too tight, there is a possibility of shortening the life of the belt

Use a hex wrench with adjustment bolt to turn the counterclockwise about 1/4. Execution equal to left and right

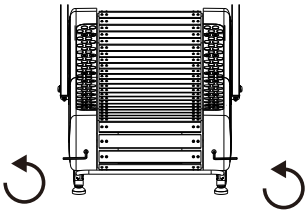

The whole belt is slightly raised from the board and is pulled out from the middle of the belt about 3cm. Please confirm whether it can rebound

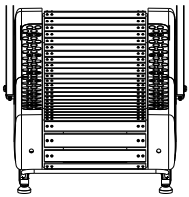

If it is too tight after confirmation, repeat from
Plastic back after adjustment

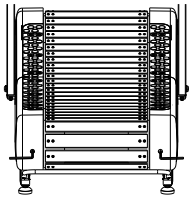

If the deviation of the conveyor belt is fixed, you can install the conveyor belt.

Mobile matters needing attention

Remove the crankcase and fold the steering wheel.
Be careful not to pinch your hands and fingers.

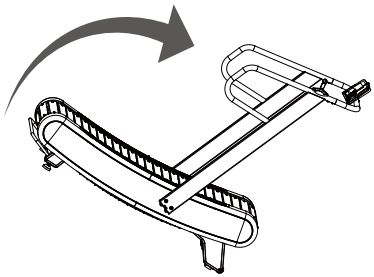

:Hold the steering wheel, lift the steering wheel, please be careful not to let the steering wheel fall.



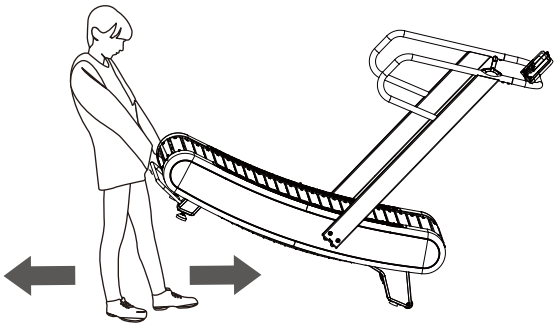

Mobile note

Be careful not to let the steering wheel fall when lifting.
Although it can be put down temporarily, please do not stand and leave.
In addition, please do not store or keep in a standing state.

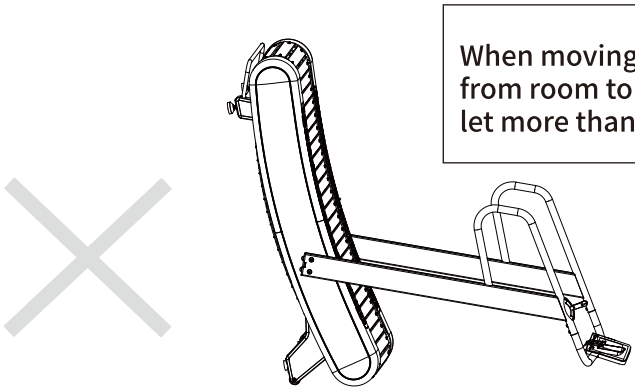

When moving a long distance from room to room, be sure to let more than 2 people move.

Adjusting the tilt angle-You can turn the foot part to adjust the tilt angle.
There are two to adjust the balance.

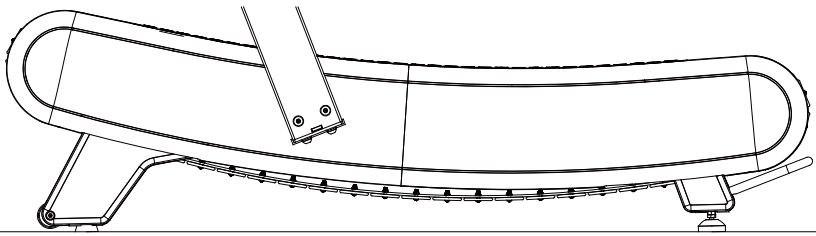

Instrument that



Function introduction

1、MANUAL, INTERVAL, TARGET, three sports, there are 3 shortcut movement keys in intermittent mode 4 shortcut movement keys in target mode.

2、After selecting the entry mode, press UP, DOWN, ENTER to set. During the exercise, you can operate the STARE button to pause and start, and press the STOP button to end.

3、Fitness monitoring parameters: time-distance-calorie-power-step speed-speed-heart rate percentage-heart rate, etc.

4、Use a 5.3k wireless heart rate chest strap.

5、Please scan the QR code on the form to download the APP and connect to the fitness equipment.

6、WARNING!

