MA-16

SEATED LEG PRESS

OWNER'S MANUAL

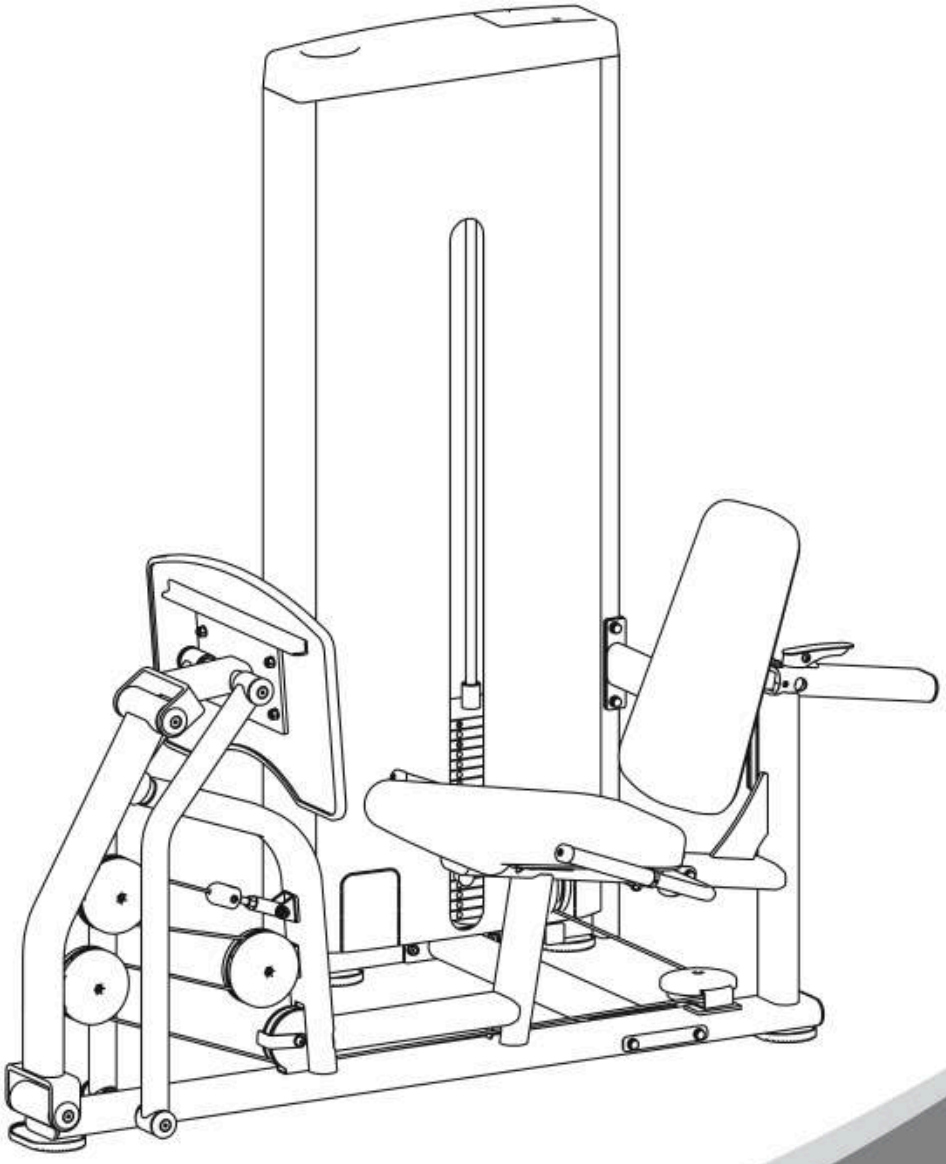

! CAUTION

Read all precautions
and instructions in this manual
before using this equipment

Read all precautions and instructions in this manual before using this equipment.

Table Of Contents

Important Safety Instructions---------- 3

Instructions---------- 4

Parts List---------- 5

Exploded View---------- 6

Measurement Guide---------- 7

Assembly Instructions---------- 8

Assembly---------- 9

Maintenance Schedule---------- 13

General Maintenance Information---------- 14

Weight Training Tips---------- 15

Important Safety Instructions

Before beginning any fitness program, you should obtain a complete physical examination from your physician. When using exercise equipment, basic precautions should always be taken, including the following:

1. Read all instructions before using the equipment.
   These instructions are written to ensure your safety and to protect the unit.

2. Use the equipment only for its intended purpose as described in this guide.
   Do not use accessory attachments that are not recommended by the manufacturer: such attachments might cause injuries.

3. The product should only be used on a level surface and is with 0.5 meters space around the product.
   Do not use the equipment outdoors.

4. Do not allow children on or near the equipment. And children are not allowed to use this equipment.
   Teenagers should use this equipment with adult supervision.

5. Do not overexert yourself or work to exhaustion.
   Do not attempt to lift more weight than you can control safely.
   If you feel any pain or abnormal symptoms, stop your workout immediately and consult your physician.

6. This equipment is not used as medical apparatus and instruments.

7. Never operate the unit when it has been dropped or damaged.
   Never drop or insert anything into any opening in the equipment.
   Always check the unit and its cables before each use. Make sure that all fasteners and cables are secure and in good working condition.
   Frayed or worn cables can be dangerous and may cause injury. Periodically check these cables for any indication of wear.
   Keep hands, limbs, loose clothing and long hair well out of the way of moving parts.

8. Be careful when getting on or off the equipment.

9. Wear proper exercise clothing and shoes for your workout, no loose clothing.

Instructions

Before beginning assembly please take the time to read instructions thoroughly. Please use the various lists in this manual to make sure that all parts have been included in your shipment. When ordering, use part number and description from the lists. Use only our replacement part when servicing. Failure to do so will void your warranty and could result in personal injury.

The equipment is designed to provide the smoothest, most effective exercise motion possible. After assembly, you should check all functions to ensure correct operation. If you experience problems, first recheck the assembly instructions to locate any possible errors made during assembly. If you are unable to correct the problem, call your authorized dealer. Be sure to have your serial number and this manual when calling. When all parts have been accounted for, continue on.

Tools Required



Ratchet Wrench and Socket



Adjustable Wrench

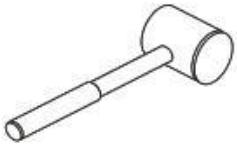

Rubber Mallet



Hex Key Wrench Set

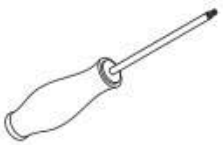

Phillips Screwdriver

Parts List

NOTE: SOME OF THESE PARTS MAY COME PRE-INSTALLED.

Item No.	Description	Qty	Item No.	Description	Qty
1	Weight Stack Frame ASSY	1	17	Flange Nut M6	1
1.1	Weight Stack Frame	1	18	Spring	1
1.2	Pulley Block	2	19	Shaft φ25.4×165	2
1.3	Guide Rod	2	20	Shoulder Bolt	1
1.4	Fixing Sleeve	2	21	Cable Shaft φ25.4×70	1
1.5	Bushing	2	22	End Cap φ50×8	8
1.6	Foot Cover	2	23	Aluminium Ring	2
1.7	4.5" Pulley	3	24	Aluminium Cap	2
1.9	Top Plate	1	25	Weight Rubber Bumper	1
1.10	Selector Pin W/Coil	1	26	Foot Pedal	1
1.11	Weight Rubber Bumper	2	27	Pulley Cover	7
1.12	Sticker	4	28	4.5" Pulley	5
1.15	Front Shroud	1	29	Plug RT50×100	4
1.16	Rear Shroud	1	30	Foot Cover	2
1.17	Top Shroud	1	31	Plastic Tube Guide	1
1.18	Shroud Hanger	8	32	Grip	2
1.19	Pulley Cover	2	33	Seat Pad	1
1.20	Plug F38	1	34	Back Pad	1
1.21	Hex Head Screw M10×80	1	35	1" Bearing	4
1.23	Hex Head Screw M10×50	1	36	Bushing φ38×φ25.4×18	8
1.24	Socket Head Cap Screw M10×50	1	37	Hex Head Screw M10×150	2
1.25	Socket Head Cap Screw M8×25	2	38	Hex Head Screw M10×125	2
1.26	Cross Pan Head Screws M5×15	20	39	Hex Head Screw M10×90	2
1.31	Nylon Lock Nut M10	3	40	Hex Head Screw M10×75	1
1.33	Flat Washer φ20×φ11×2	3	41	Hex Head Screw M10×70	2
			42	Hex Head Screw M10×30	10
1.37	Flat Washer φ9×φ16×1.6	2	43	Button Head Cap Screw M10×30	1
1.38	Spring Washer φ8	2	44	Button Head Cap Screw M8×45	1
1.47	Pop Pin 1	1	45	Button Head Cap Screw M6×12	2
1.48	Rubber Bumper	2	46	Socket Head Cap Screw M10×50	5
1.49	Reed Nut M5	4	47	Socket Head Cap Screw M8×25	1
2	Main Frame	1	48	Flat Head Cap Screw M10×75	2
3	Front Swing Frame	1	49	Flat Head Cap Screw M10×30	4
4	Foot Frame	1	50	Flat Head Cap Screw M10×25	10
5	Foot Board	1	51	Socket Screw M5×3	4
6	Connecting Rod	2	53	Nylon Lock Nut M10	20
7	Ground Frame	1	54	Nylon Lock Nut M8	2
8	Top Frame	1			
9	Handle Frame	1	56	Flat Washer φ11×φ20×2	39
10	Back Pad Bolt	1	57	Flat Washer φ9×φ16×1.6	3
11	Bolt Frame	1	58	Spring Washer φ10	4
12	Seat Board	1	59	Plug PT50×100	1
13	Pulley Block	1	60	Flat Head Cap Screw M6×16	2
14	Cable	1			
15	Back Pad Frame	1	62	Lube	1
16	Cable End φ20×77×M12	1			

Exploded View

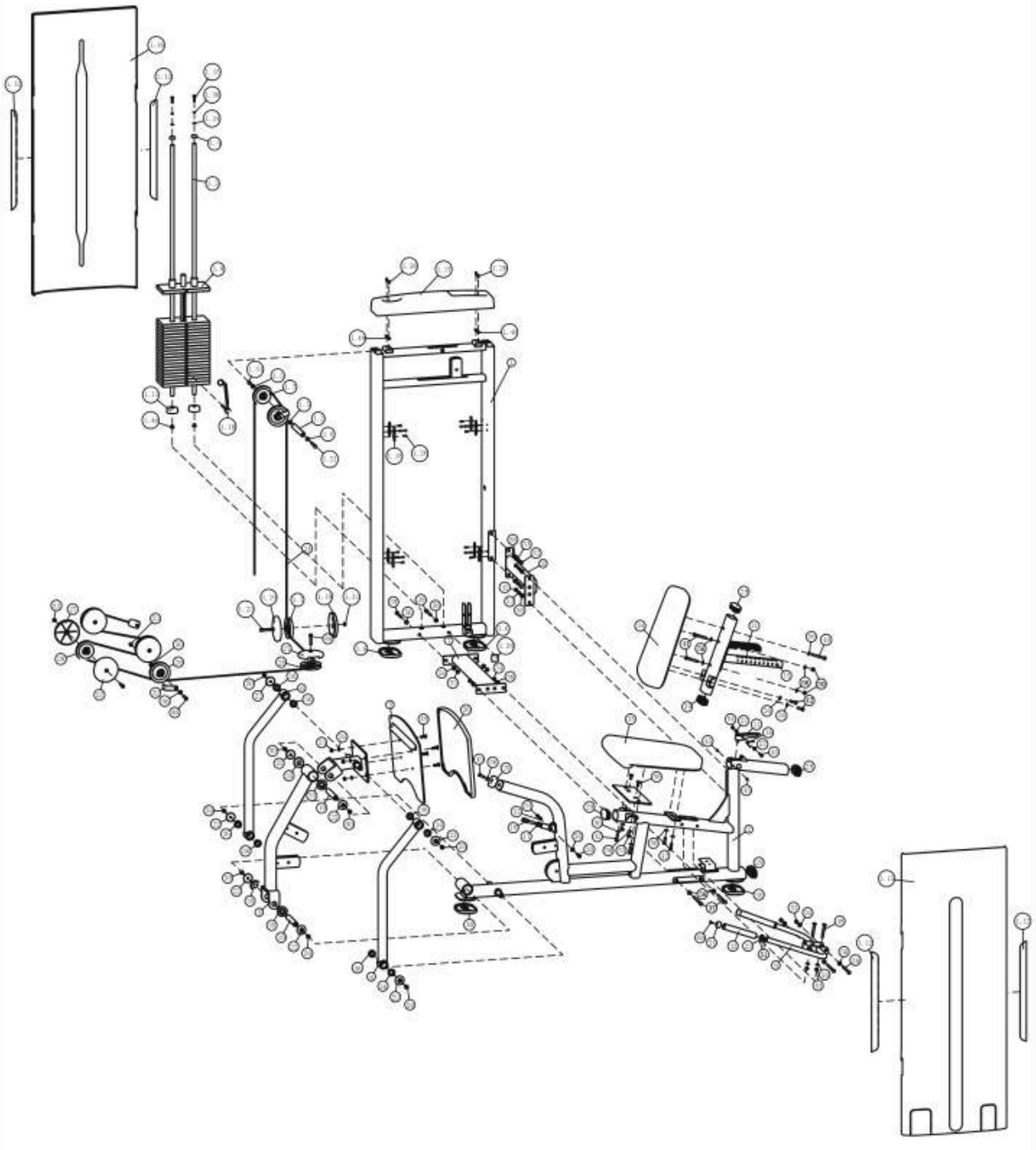

Measurement Guide

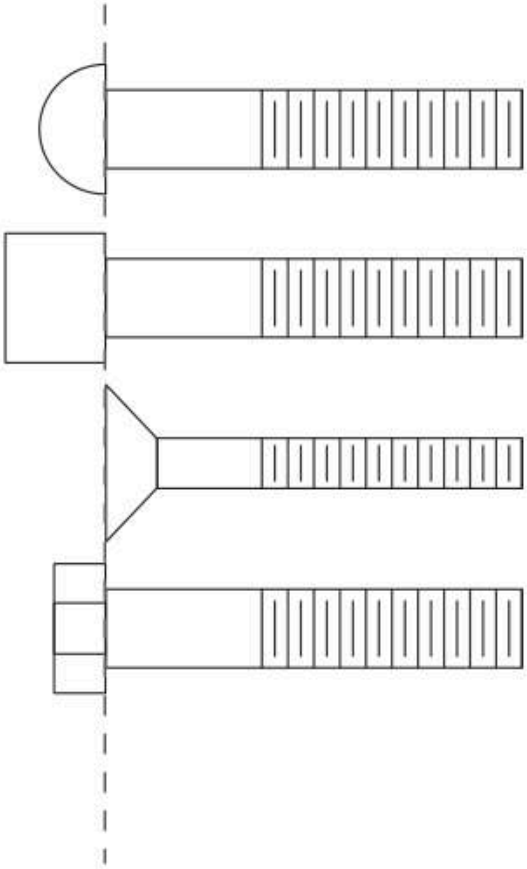

BHCS = Button Head Cap Screw

SHCS = Socket Head Cap Screw

FHCS = Flat Head Cap Screw

HHB = Hex Head Bolt

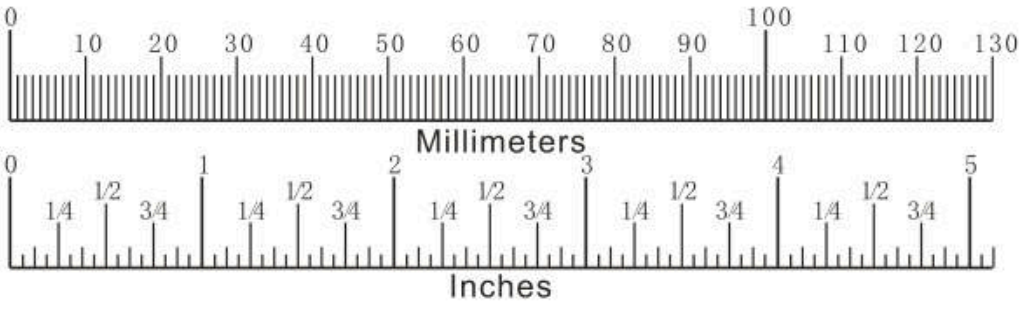

Assembly Instructions

Assembly of the equipment takes professional installers about 2 hours. If this is the first time you have assembled this type of equipment, plan to spend more time. It is strongly recommended to assemble the equipment by professional installers. You may find it quicker, safer, easier to assemble this equipment with the help of a friend, as some of components may be large, heavy or awkward to handle alone. It is important that you assemble your product in a clean, clear, uncluttered area. This will enable you to move around the product while you are fitting components and reduce the possibility of injury during assembly.

⚠ NOTE

As with any assembled part, proper alignment and adjustment is critical. While tightening the fasteners, be sure to leave room for adjustments. Do not fully tighten the fasteners until instructed to do so. Be careful to assemble the components in the sequence presented in this guide.

Assembly

STEP 1

Note: Hand Tighten Bolts and Nylon Lock Nuts.

Item No.	Description	Qty	Item No.	Description	Qty
1	Weight Stack Frame ASSY	1	39	Hex Head Screw M10×90	2
2	Main Frame	1	42	Hex Head Screw M10×30	4
7	Ground Frame	1	53	Nylon Lock Nut M10	4
8	Top Frame	1	56	Flat Washer φ11×φ20×2	12
37	Hex Head Screw M10×150	2	58	Spring Washer φ10	4

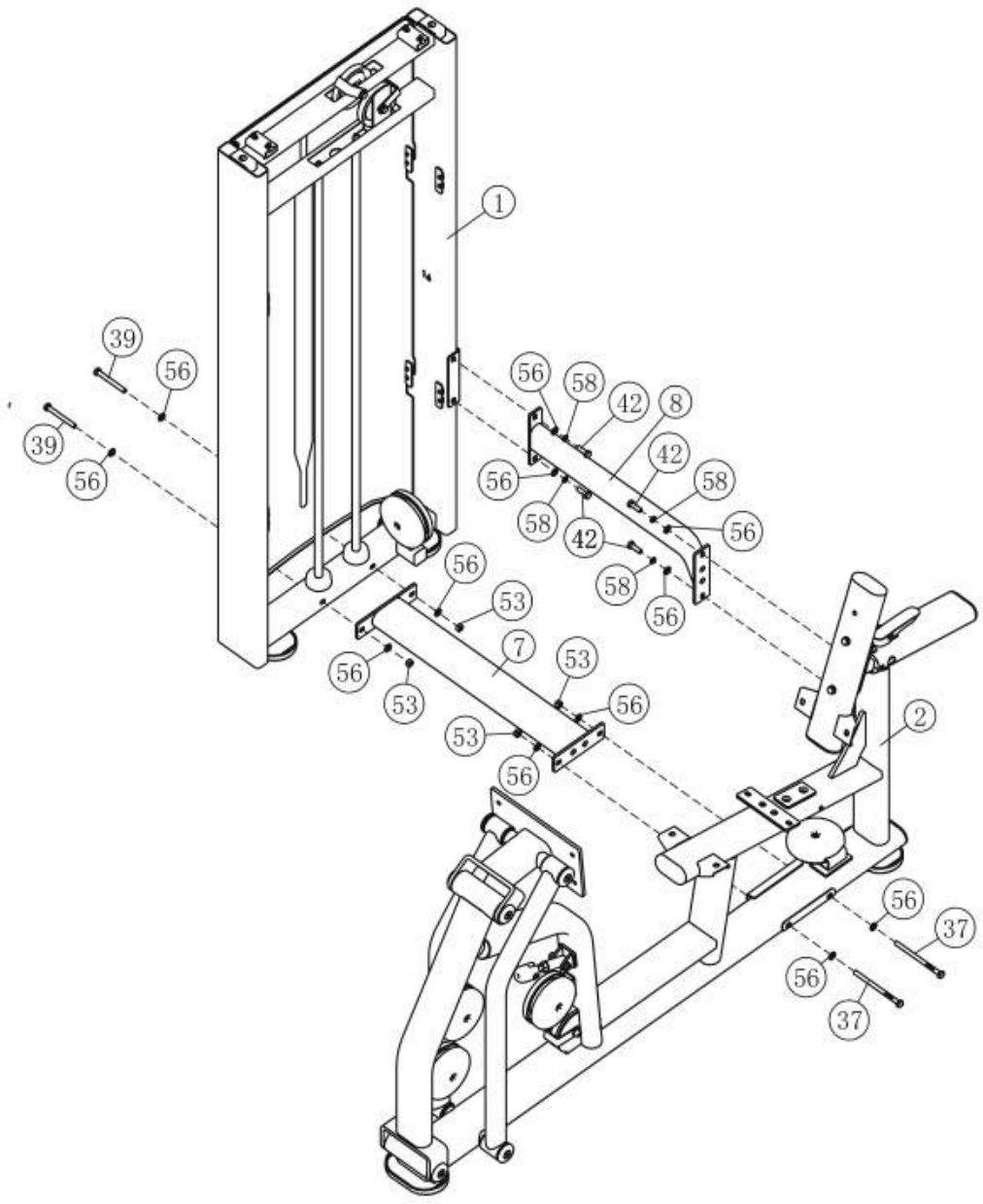

STEP 2

Note: Hand Tighten Bolts and Nylon Lock Nuts.

Item No.	Description	Qty
14	Cable	1

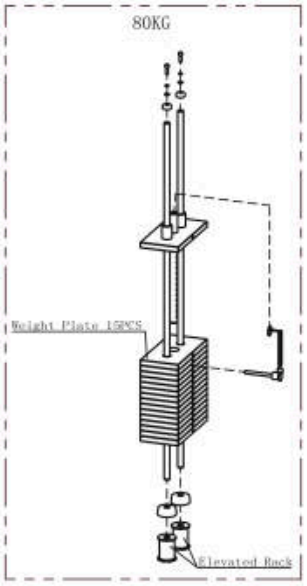

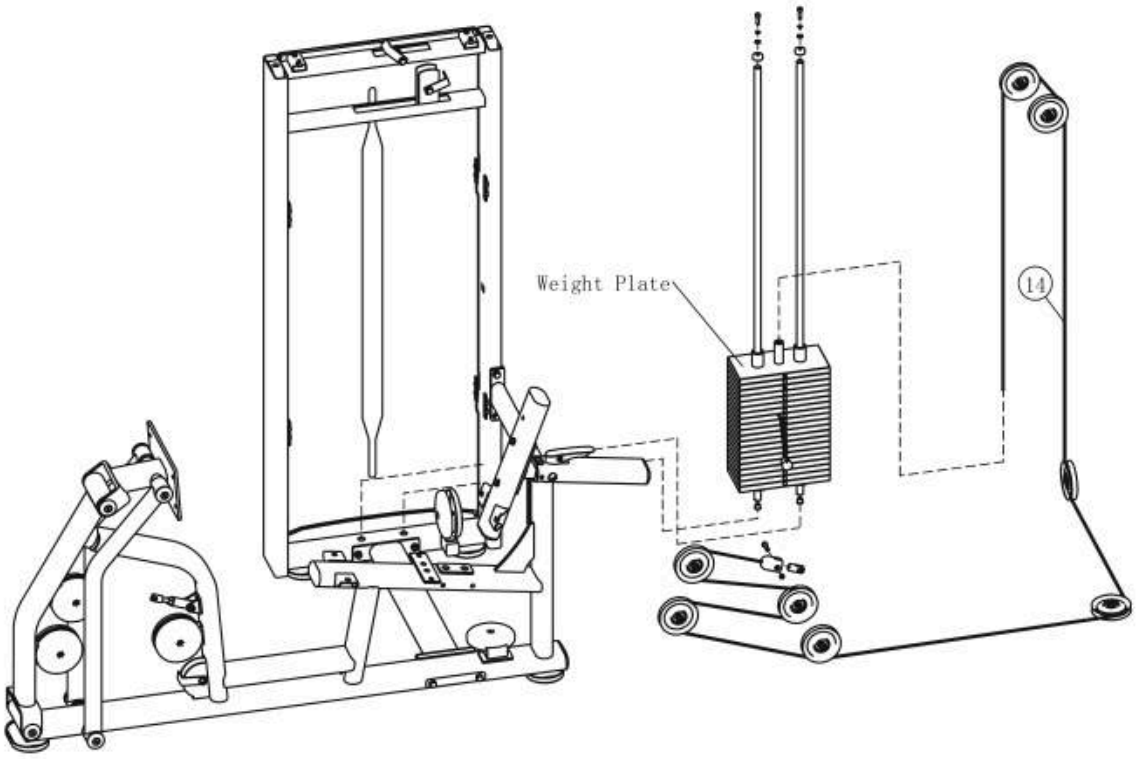

STEP 3

Note: Hand Tighten Bolts and Nylon Lock Nuts.

Item No.	Description	Qty	Item No.	Description	Qty
5	Foot Board	1	49	Flat Head Cap Screw M10×30	4
9	Handle Frame	1	50	Flat Head Cap Screw M10×25	2
12	Seat Board	1	53	Nylon Lock Nut M10	10
38	Hex Head Screw M10×125	2	56	Flat Washer φ11×φ20×2	12
48	Flat Head Cap Screw M10×75	8			

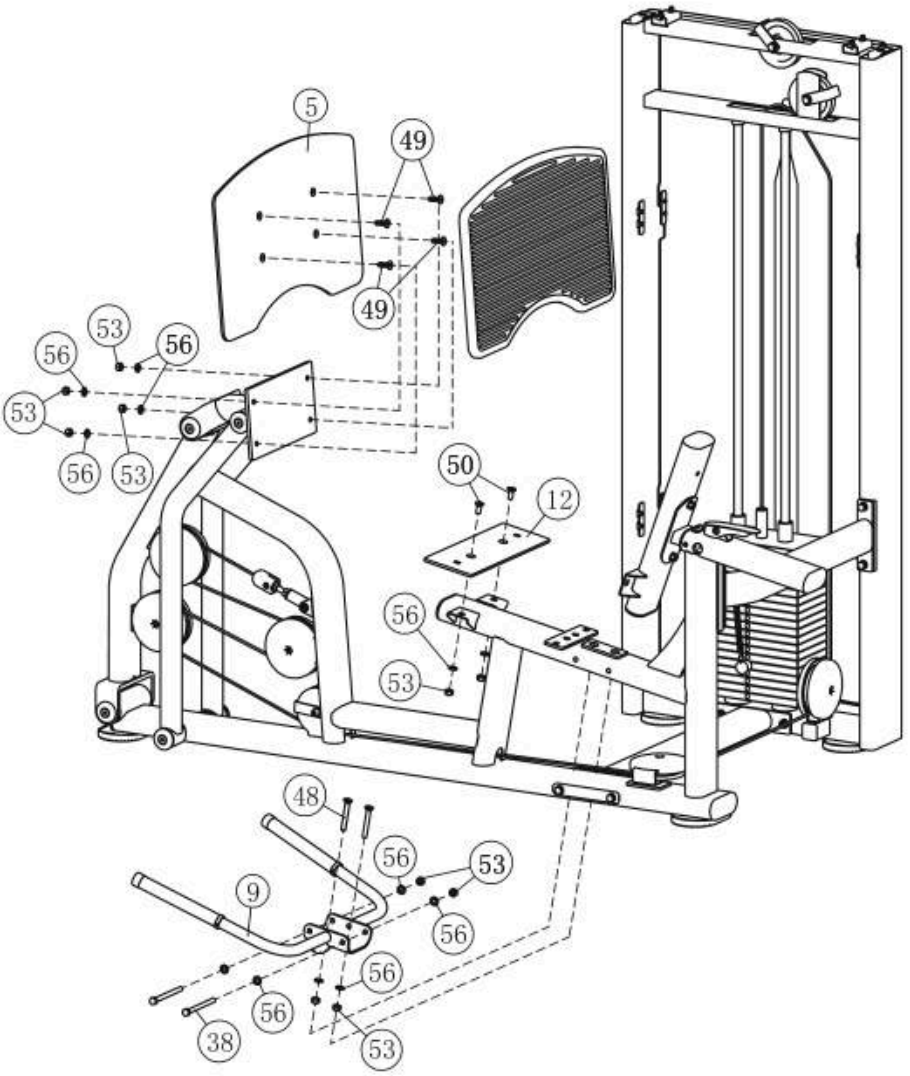

STEP 4

Note: Wrench Tighten Screws.

Item No.	Description	Qty	Item No.	Description	Qty
1.15	Front Shroud	1	41	Hex Head Screw M10×70	1
1.17	Top Shroud	1	42	Hex Head Screw M10×30	6
33	Seat Pad	1	56	Socket Head Cap Screw M10×50	7
34	Back Pad	1			

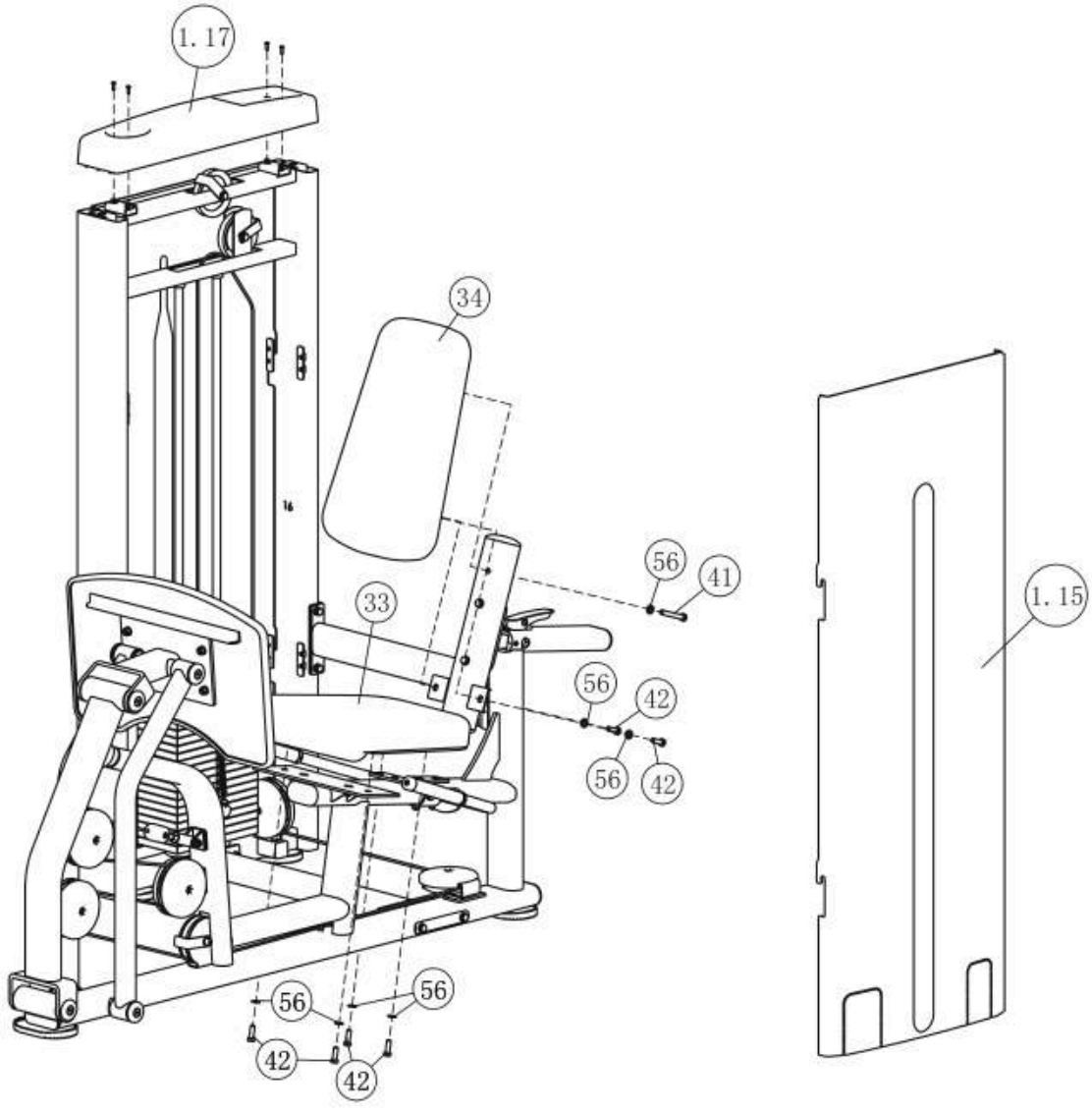

Maintenance Schedule

ROUTINE	COMMERCIAL MAINTENANCE	HOME MAINTENANCE	LATEST DATE ENTRY						
Inspect; Links, Pull Pins, Snap Locks, Swivels, Weight Stack Pins	DAILY	WEEKLY							
Clean; Upholstery	DAILY	WEEKLY							
Inspect; Cables or Belts and their tension	DAILY	WEEKLY							
Inspect; Accessory Bars, and Handles	WEEKLY	3 MONTHS							
Inspect; All Decals	WEEKLY	3 MONTHS							
Inspect; All Nuts and Bolts, Tighten if needed	WEEKLY	3 MONTHS							
Inspect; Anti-Skid Surface	WEEKLY	3 MONTHS							
Clean & Lubricate; Guide Rods with a Teflon (PTFE) based lubricant (Superlube)	MONTHLY	3 MONTHS							
Lubricate; Seat Sleeves, Turcite Bushings, Linear Bearing	MONTHLY	3 MONTHS							
Clean and Wax; All Glossy Finishes	6 MONTHS	YEARLY							
Repack with Grease; Linear Bearings	6 MONTHS	YEARLY							
Replace; Cables, Belts and Connecting Parts	YEARLY	3 YEARS							

Your equipment comes with a commercial maintenance decal. For personal, in home use, please follow the home maintenance schedule listed above.

General Maintenance Information

Links, Pull-Pins, Snap Hooks, Swivels, Weight Stack Pins:

* Check all pieces for signs of visible wear or damage.
* Check springs in snap hooks and pull-pins for proper tension and alignment.
* If the spring sticks or has lost its rigidity, replace it immediately.

Upholstery:

* To ensure prolonged upholstery life and proper hygiene, all upholstered pads should be wiped down with a damp cloth after every workout.
* Periodically take the time to use a mild soap or an approved vinyl upholstery cleaner to deter the onset of cracking or drying. Avoid using any abrasive cleaners or cleaners not intended for use on vinyl.
* Replace ripped or warn upholstery immediately.
* Keep sharp or pointed objects clear of all upholstery.

Decals:

* Inspect and familiarize yourself with any safety warnings or other user information posted on each decal.

Nuts and Bolts:

* Inspect all nuts and bolts for any loosening and tighten if needed.
* Go through a re-tightening sequence periodically to ensure that all hardware is tensioned proper.

Anti-Skid Surfaces:

* These surfaces are designed to supply secure footing and need to be replaced if they appear worn or become slippery.

Belts and Cables:

* We uses only high quality belt, and mil-spec cables.
* Visually inspect the belts and cables for fraying, cracking, peeling or discoloration.
* While the machine is not in use, carefully run your fingers along the belt or cable to feel for thinning or bulging areas.
* Replace belts and cables immediately at the first signs of damage or wear. Do not use equipment until belts or cables have been replaced.

Belt and Cable Tension:

* Referring to the Owners Manual, when belts or cables are used check all bolts attachments to be sure they are properly attached.
* Check slack in cables and re-adjust cable tension if needed.

Seat Sleeves, Guide Rods:

* Wipe down adjusting tubes with a dust free rag before applying lubricant.
* Lubricate seat sleeves and Guide Rods with a Silicon or Teflon based lubricant spray.

Linear Bearings:

* Referring to the Owners Manual carefully disassemble the bearing from its housing and place a finger full of light grease (lithium, super lube, etc.) into the inside of the bearing. Using your finger, press the grease into the ball-bearings and their tracks. repeat until the ball-bearing tracks are full of grease. Insert the shaft back into the bearing and wipe off excess grease.

PLEASE KEEP THIS FOR YOUR RECORDS

Weight Training Tips

Use this manual to guide you through the basic exercises you can perform on your equipment. To gain maximum results and avoid possible injury, consult a fitness professional to develop your complete exercise program.

Always consult your physician before starting any exercise program.

To be successful in your exercise program, it is important to develop an understanding of the basic principles of strength training. Now that you have your equipment, it is only natural that you want to get started immediately. First, determine a set of realistic goals and objectives for yourself. By deciding on an exercise plan that is right for you prior to starting, you will contribute significantly to your success.

Warm up properly before engaging in weight resistance training. Stretching, yoga, jogging, calisthenics or other cardiovascular exercise can help prepare your body for the heavier workload of lifting weights.

Learn how to perform the exercise correctly before using heavy weight. Correct form is important to avoid injury and to ensure that you work the proper muscle groups.

Know your limitations. If you are new to weight training or are embarking on an exercise regimen after a long layoff, start slowly and build foundational strength over a longer period of time.

Pay attention to your breathing. Exhale when you exert is a general rule of thumb. Never hold your breath.


SGS
SGS
SGS
SGS