SPINNING BIKE

OWNER'S MANUAL



Dear Customer,

Please read this instruction very carefully before using this item. You will find important information regarding safety of your spinning bike.

IMPORTANT SAFTY NOTICE:

Note the following precaution before assembling or operating the machine.

1、 Keep children and pets away from the Spinning Bikeat all times.
DO NOT leave unattended children in the same room with the machine.

2、 Handicapped or disabled persons should not use the
spinning Bike without the presence of a qualified health professional or physician.

3、 If the user experiences dizziness, nausea, chest pain, or any
other abnormal symptoms, STOP the workout at once. CONSULT A PHYSICIAN IMMEDIATELY.

4、 Before beginning training, remove all within a radius of 2 meters from the machine.
DO NOT place any sharp objects around the Spinning Bike.

5、 Position the Spinning Bike on a clear, level surface away from water and moisture.
Place mat under the unit to help keep the machine stable and to protect the floor.

6、 Use the Spinning Bike only for its intended use as described in this
manual. DO NOT use any other accessories not recommended by the manufacturer.

7、 Assemble the machine exactly as the descriptions in the
instruction manual.

8、 Check all bolts and other connections before using the
machine for the first time and ensure that the trainer is in the safe condition.

9、 Hold a routine inspection of the equipment. Pay special
attention to components which are the most susceptible to wear off, i.e. connecting points and wheels. The defective components should be replaced immediately. The

safety level of this equipment can only be maintained by doing so. Please don't use the Spinning Bike until it is repaired well.

10、 NEVER operate the Spinning Bike if it is not functioning properly.

11、 This machine can be used for only one person’s training at a time.

12、 Do not use abrasive cleaning articles to clean the machine.
Remove drops of sweat from the machine immediately after finishing training.

13、 Always wear appropriate workout clothing when exercising.
Running or aerobic shoes are also required.

14、 Before exercising, always do stretching first.

15、 The power of the machine increases with increasing the speed, and the reverse. The machine is equipped with adjustable knob, which can adjust the resistance.

WARNING: BEFORE BEGINNING THIS OR ANY EXERCISE PROGRAM, CONSULT YOUR PHYSICIAN F I R S T. THIS IS ESPECIALLY IMPORTANT FOR INDIVIDUALS OVER THE AGE OF 35 OR PERSONS WITH PRE-EXISTING HEALTH PROBLEMS. READ ALL INSTRUCTIONS BEFORE USING THE SPINNING BIKE. THANE ASSUMES NO RESPONSIBILITY FOR PERSONAL INJURY OR PROPERTY DAMAGE SUSTA I N E D BY OR THROUGH THE USE OF THIS PRODUCT

EXPLODED-VIEW :

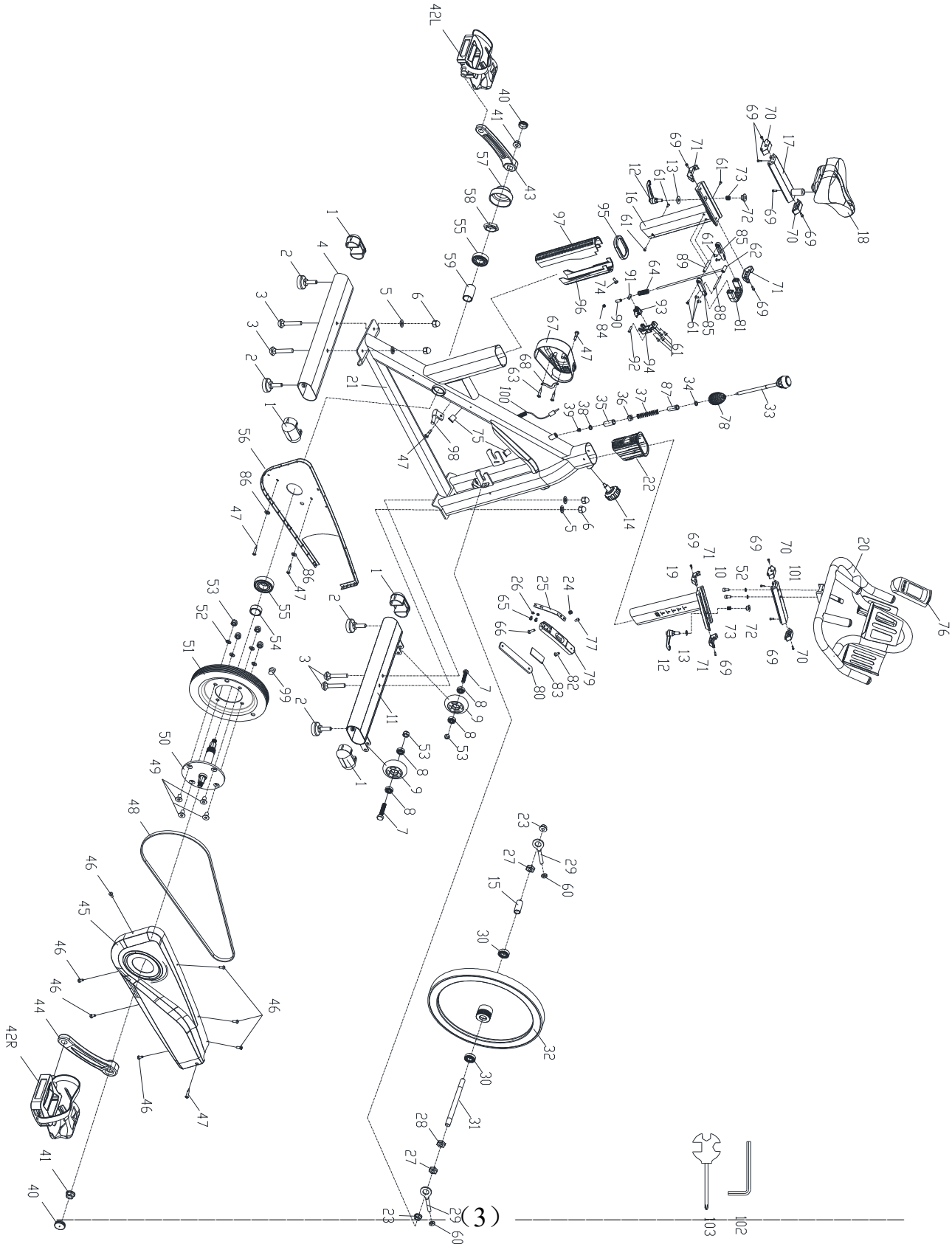

PARTS LIST:

NO	NAME	SPECIFICATION	Q,TY	UNIT
1	TUBE PLUG	100*50*2	4	PCS
2	ADJUSTMENT FOOT	φ52*43（M8X25）	4	PCS
3	CARRIAGE BOLT	M8*62	4	PCS
4	REAR STABILIZER	WEDLING	1	PCS
5	FLAT WASHER 1	8	4	PCS
6	DOMED NUT 1	M8 (H=16mm)	4	PCS
7	HEX HEAD BOLT 1	M8*40	2	PCS
8	BEARING 1	608ZZ	4	PCS
9	WHEEL	φ69*26	2	PCS
10	BOLT 1	M8*15	2	PCS
11	FRONT STABILIZER	WEDLING	1	PCS
12	ADJUSTMENT KNOB 1	M10*20	2	PCS
13	FLAT WASHER 2	10(φ28-30/H2.5）	2	PCS
14	CONICAL ELASTICITY	φ60*80 (M16*1.5),	1	PCS
15	LONG TUBE	φ16*φ12.1*36	1	PCS
16	VERTICAL SEAT POST	WEDLING	1	PCS
17	SEAT POST	WEDLING	1	PCS
18	SEAT	AQ-6010	1	PCS
19	HANDLEBAR POST	WEDLING	1	PCS
20	HANDLEBAR	WEDLING	1	PCS
21	MAIN FRAME	WEDLING	1	PCS
22	PLASTIC SLEEVE	100*50*2	1	PCS
23	HEX FLANGE SURFACE NUT 1	M12*1.25	2	PCS
24	LOCK NUT	M6	1	PCS
25	ADJUSTING METAL	δ1.5（122*164）	1	PCS
26	SPRING WASHER	5	2	PCS
27	HEXAGONAL NUT 2	M12*1.25 t7	2	PCS
28	HEXAGONAL NUT 3	M12*1.25 t3.5	1	PCS
29	FIXING BOLT	M6*57/φ12.5	2	PCS
30	BEARING 2	6001ZZ(NBK)	2	PCS
31	FLYWHEEL SHAFT	φ12*160/ M12*1.25	1	PCS
32	FLYWHEEL	φ453*65*30 (22KG)	1	PCS

33	KNOB	M10*200	1	PCS
34	FLAT WASHER 3	10(Φ16,Φ10.2/δ1.5）	1	PCS
35	FIXING TUBE	φ14*25.5	1	PCS
36	ADJUSTMENT NUT	16*16*δ15（M10)	1	PCS
37	LARGE SPRING	δ1.8*40	1	PCS
38	FLAT WASHER 4	6(Φ1**4,**Φ6/δ2.5）	1	PCS
39	DOMED NUT2	M6	1	PCS
40	CRANK PLUG	φ28*6.5	2	PCS
41	HEX FLANGE SURFACE NUT 2	M12*1.25	2	PCS
42L	PEDAL(L)	JD-304V M20*1.5（L）	1	PCS
42R	PEDAL(R)	JD-304V M20*1.5 (R）	1	PCS
43	LEFT CRANK	170*42.5 （M20*1.5-LH）	1	PCS
44	RIGHT CRANK	170*42.5 （M20*1.5）	1	PCS
45	OUTTER CHAIN COVER	756*283*71	1	PCS
46	SCREW 1	ST4.2*9.5	7	PCS
47	SCREW 2	ST4.2*19	5	PCS
48	BELT	5PK （53.5” L1360mm)	1	PCS
49	BOLT 2	M8*18	4	PCS
50	MANDREL	φ25*182	1	PCS
51	PULLEY	φ200*24	1	PCS
52	ELASTIC WASHER 1	8	6	PCS
53	LOCK NUT 1	M8	6	PCS
54	METAL TUBE 2	φ30*φ25.05*9	1	PCS
55	BEARING 3	6005ZZ (NBK）	2	PCS
56	INNER CHAIN COVER	743*277*17	1	PCS
57	CRANK COVER	φ59*35	1	PCS
58	FIXING NUT	M25*1	1	PCS
59	METAL TUBE 3	φ30*φ25.05*56.1	1	PCS
60	HEXAGONAL NUT 4	M6	2	PCS
61	SCREW 3	M5*12	12	PCS
62	CONNECT THE ROD ASSEMBLY	WEDLING	1	PCS
63	SCREW 4	ST4.2*19	2	PCS
64	SPRING 2	φ1.0*55	1	PCS
65	HEX HEAD BOLT 2	M5*10	2	PCS
66	BOLT 3	M6*25	1	PCS
67	DECORATIVE COVER 3	235*155*235	1	PCS

68	PLASTIC SHEET	30*79*4	1	PCS
69	BOLT 4	M4*8	12	PCS
70	DECORATIVE COVER 4	19*59*25	4	PCS
71	DECORATIVE COVER 5	19*59.5*23	4	PCS
72	NUT BLOCK	Φ25*10.5 （M10）	2	PCS
73	SPRING 3	φ1*11.5	2	PCS
74	SCREW 5	ST2.9*9.5	1	PCS
75	PLASTIC PLUG	φ14*14	2	PCS
76	COMPUTER	RD-93212	1	PCS
77	BOLT6	M6*12	1	PCS
78	TELESCOPIC TUBE	φ40.6*60	1	PCS
79	BLOCK	163.2*30*17.5	1	PCS
80	LEATHER PIECE	159.7*152.6*26.5*H5	1	PCS
81	HANDLE	70*58*20	1	PCS
82	BOLT 4	M6*18	1	PCS
83	EVA MAT	60*26.5*t3.5	1	PCS
84	LOCK NUT	M5	1	PCS
85	LEFT AND RIGHT HAND	80*16*10	2	PCS
86	FLAT WASHER 5	5	2	PCS
87	BRAKE FIXING TUBE	φ21.1*φ18*φ10.2*27.5	1	PCS
88	LONG SHAFT	Φ5*56	1	PCS
89	STEP SHAFT	Φ8*50.5	1	PCS
90	SPACER	Φ8*Φ5.2*20	1	PCS
91	FIXED SHAFT	Φ8*16	1	PCS
92	SHORT SHAFT	Φ5*23	1	PCS
93	ALUMINUM BUCKLE	32*26*15	1	PCS
94	FIXING FRAME	65*27.5*23.5	1	PCS
95	UPPER COVER	115*56*12.5	1	PCS
96	FRONT BUSHING	257*48*46	1	PCS
97	REAR BUSHING	332*65*46	1	PCS
98	SENSOR HOLDER	LTF8163	1	PCS
99	MAGNET	C-02Z	1	PCS
100	SENSING LINE	L=1400	1	PCS
101	SLIDER	200*54.5*23.5	1	PCS
102	SPANNER	6＃ (86X35)	1	PCS
103	CROSS WRENCH	S=13,14,15	1	PCS

ASSEMBLY STEPS：

STEP 1：Assemble Front and Rear Stabilizers

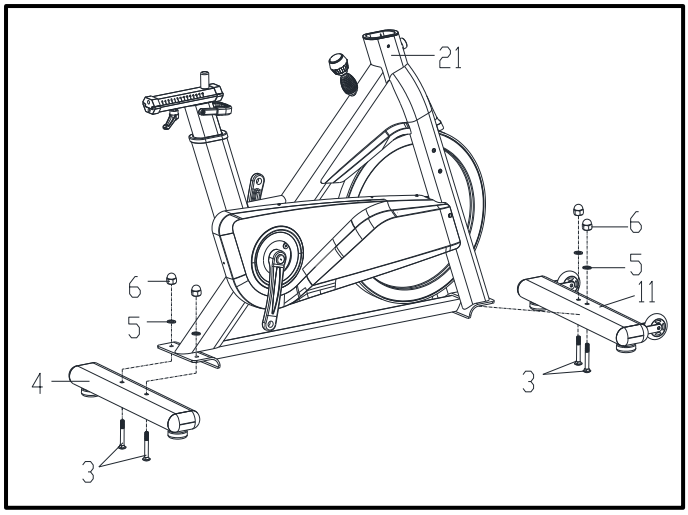

FIG.1

1. Attached the Front Stabilizer (pt.11) to the Main Frame(pt.21), Lock the Front Stabilizer on the Main frame with 2pcs of Carriage Bolts(pt.3) and 2pcs of Flat Washers (pt.5) and 2pcs of Domed Nut(pt.6).

2. Use the same way to lock the Rear(pt.4) on the Main frame.

Please make sure you lock the Front stabilizer and Rear Stabilizer firmly on the Main Frame.

STEP 2：Assemble Seat

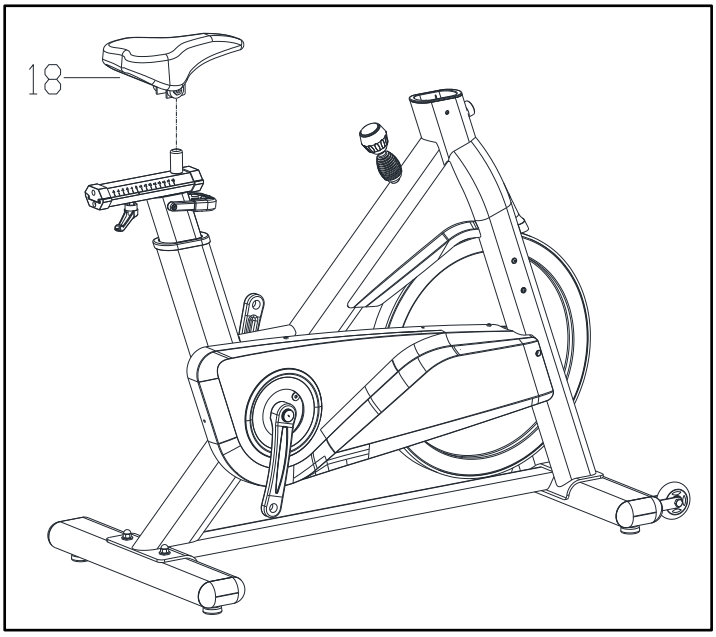

FIG.2

Fix the Seat on the Seat Post, then lock the

2pcs of nut under the Seat firmly.

STEP 3：Assemble Handlebar/Computer

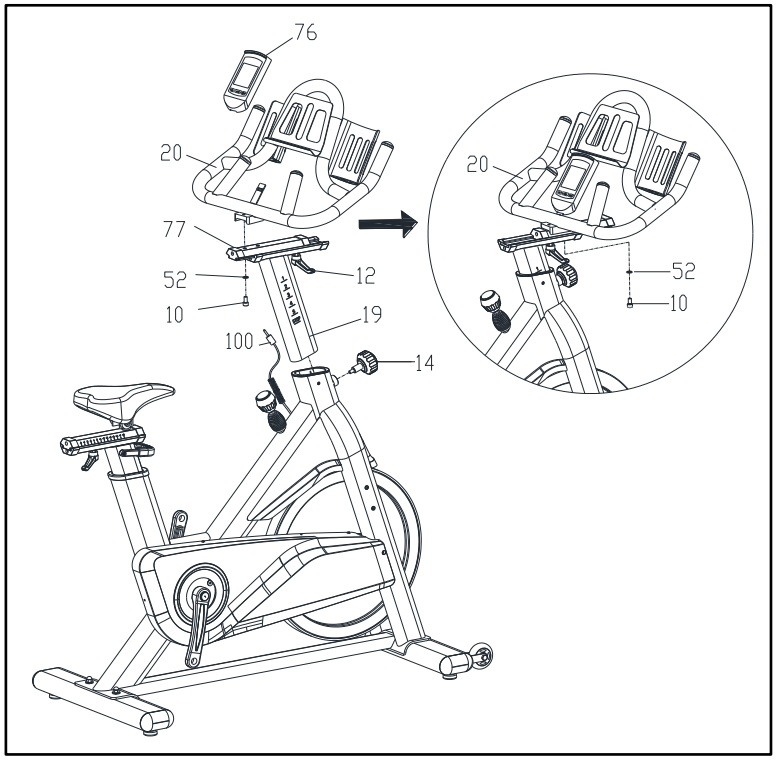

Fix the Handlebar(pt.20) on the Handlebar Post(pt.19) with 2pcs of Bolt(pt.10) and 2pcs of Washer(pt.52)

Insert the Handlebar Post(pt.19) into the Main Frame, adjust it at a expect height, then lock the adjustment knob(pt.14) into the nut on the Main Frame. Please make sure that the knob pin inserts into the Handlebar Post hole.

Insert (pt 76) into (pt 20) sheet, then insert (pt 100) into the round hole behind (pt 76);

FIG.3

STEP 4：Assemble Pedals/Bottle Holder

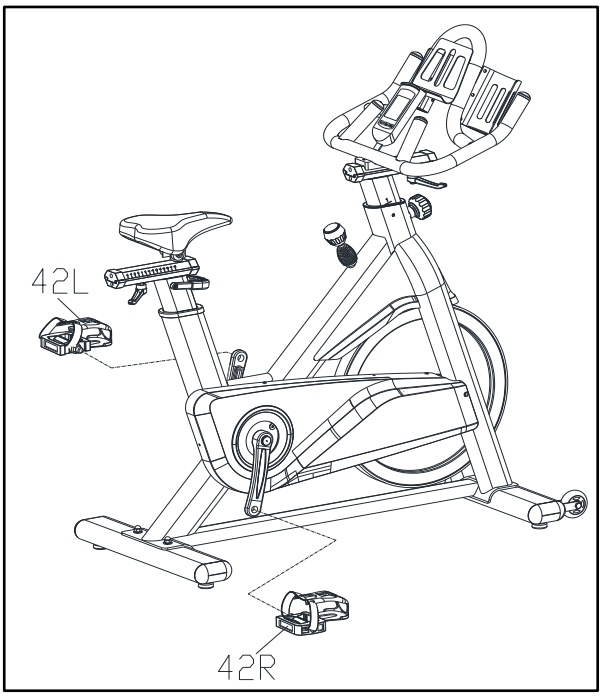

Take the Left Pedal(pt.42L) the one with a L Sticker, screw its axle Counter-clockwise into the Left Crank.

Take the Right Pedal(pt.42R) the one with a R sticker, screw its axle Clockwise into the Right Crank.

Note: The Left and Right means the Left side and Right side when you ride on the bike.

FIG.4

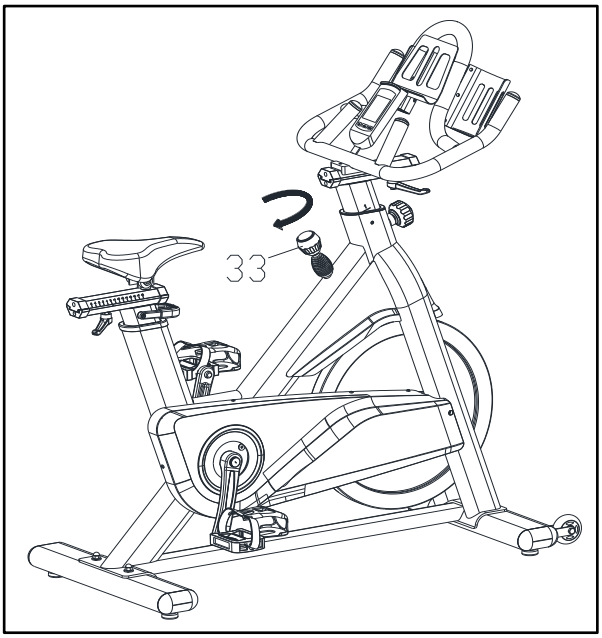

A.) Adjusting the Tension:
Increasing or decreasing the tension allows you to add variety to your workout sessions by adjusting the resistance level of the bike.
To increase tension and increase resistance (requiring more strength to pedal), turn the *EmergencyBrake & Tension Control Knob (*pt.*33)* to the *right*.
To decrease tension and increase resistance (requiring less strength to pedal), turn the *EmergencyBrake & Tension Control Knob (*pt.*33)* to the *left*.

FIG.5

FIG.A

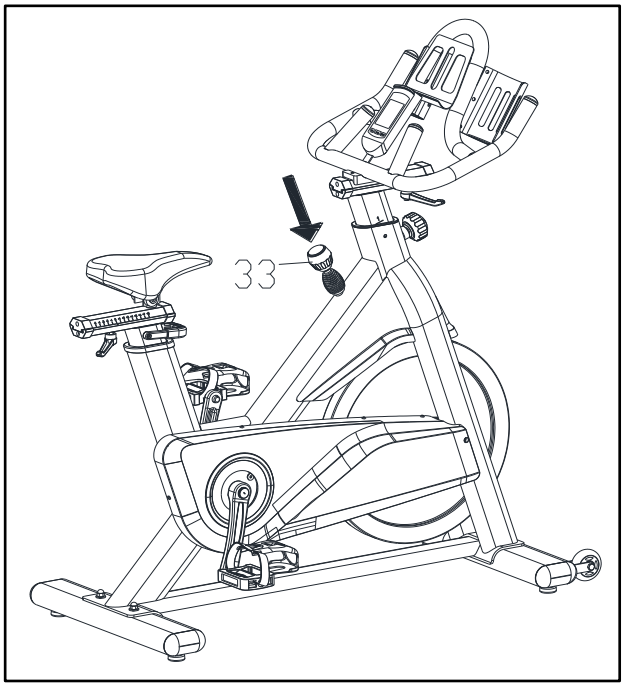

B.) Using the Emergency Brake Function:
The same knob that allows you to adjust the tension of the bike also doubles as the Emergency Brake. Use this safety feature in any situation where you would need to get off the bike orstop the bike's flywheel.
To use the Emergency Brake function in any situation you would need it in, firmly pressdown on the *Emergency Brake & Tension Control Knob(*pt.*33)*.

FIG.B

ADJUSTMENT

***To adjust the seat height, slacken the spring knob on the vertical post stem on the main frame and pull back the knob. Position the vertical seat post for the desired height so that holes are aligned, then release the knob and retighten it.**

***To move the seat forward in the direction of the handlebar or backwards away from it, loosen the adjusting knob and washer and pull the knob back. Slide horizontal seat post into desired position. Align holes and then retighten the adjusting knob.**

***To adjust the handlebar height, slacken the spring knob and secondary knob and pull both knobs back. Slide the handlebar post along the housing on the main frame to the desired height and, with the holes aligned correctly, tighten the spring adjusting knob and then the secondary knob.**

EXERCISE INSTRUCTIONS

Using your **SPINNING BIKE** provides you with several benefits, it will improve your physical fitness, tone muscle and in conjunction with calorie controlled diet help you lose weight.

1.The Warm Up Phase

This stage helps get the blood flowing around the body and the muscles working properly. It will also reduce the risk of cramp and muscle injury. It is advisable to do a few stretching exercises as shown below. Each stretch should be held for approximately 30 seconds, do not force or jerk your muscles into a stretch - if it hurts, **STOP.**

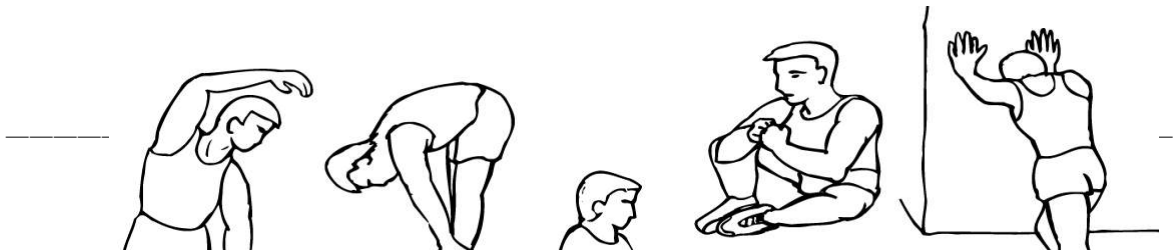

MUSCLE TONING

FORWARD BENDS

INNER THIGH

CALF / ACHILLES

SIDE BENDS

OUTER THIGH

2.The Exercise Phase

This is the stage where you put the effort in. After regular use , the muscles in your legs will become Stronger. Work to your but it is very important to maintain a steady tempo throughout. The rate of work should be sufficient to raise your heart beat into the target zone shown on the graph below.

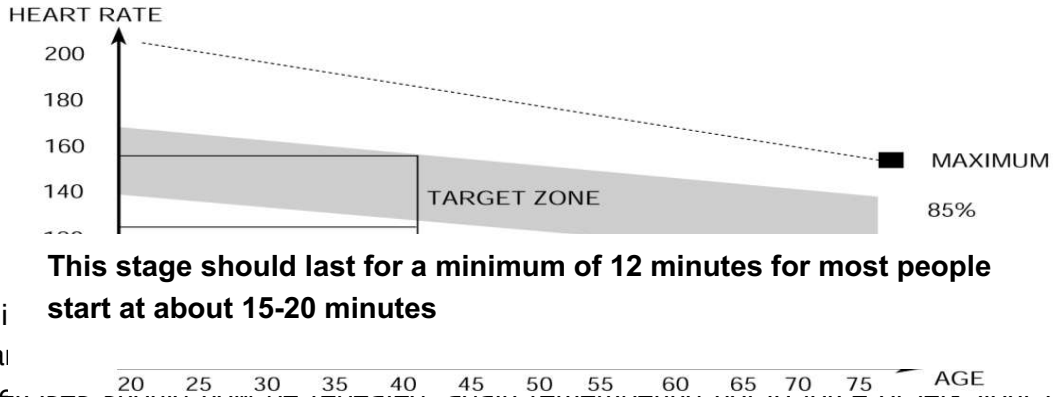

This stage should last for a minimum of 12 minutes for most people start at about 15-20 minutes

Thi at of the
wa tretching
exercises should now be repeated, again remembering not to force or jerk your muscles into the stretch.

As you get fitter you may need to train longer and harder. It is advisable to train at least three times a week, and if possible space your workouts evenly throughout the week.

To tone muscle while on your**SPINNING BIKE** you will need to have the resistance set quite high. This will put more strain on our leg muscles and may mean you cannot train for as long as you would like. If you are also trying to improve your fitness you need to alter your training program. You should train as normal during the warm up and cool down phases, but towards the end of the exercise phase you should increase resistance, making your legs work hardenthan normal. You may have to reduce your speed to keep your heart rate in the target zone.

The important factor here is the amount of effort you put in. The harder and longer you work the more calories you will burn. Effectively this is the same as if you were training to improve your fitness, the difference is the goal.

USE

The tension control knob allows you to alter the resistance of the pedals. A high resistance makes it more difficult to pedal, a low resistance makes it easier. For the best results set the tension while the bike is in use.

WEIGHTLOSS